WOODWARD

Installation and Operation Manual

The information in this publication is no longer current, and may not reflect changes or safety issues that have occurred since the publication was originally released.

38 Liquid Fuel Valve and Limiter

Manual 40116A

WARNING

Read this entire manual and all other publications pertaining to the work to be performed before installing, operating, or servicing this equipment. Practice all plant and safety instructions and precautions. Failure to follow instructions can cause personal injury and/or property damage.

The engine, turbine, or other type of prime mover should be equipped with an overspeed shutdown device to protect against runaway or damage to the prime mover with possible personal injury, loss of life, or property damage.

The overspeed shutdown device must be totally independent of the prime mover control system. An overtemperature or overpressure shutdown device may also be needed for safety, as appropriate.

CAUTION

To prevent damage to a control system that uses an alternator or battery-charging device, make sure the charging device is turned off before disconnecting the battery from the system.

Electronic controls contain static-sensitive parts. Observe the following precautions to prevent damage to these parts.

- **Discharge body static before handling the control (with power to the control turned off, contact a grounded surface and maintain contact while handling the control).**
- **Avoid all plastic, vinyl, and Styrofoam (except antistatic versions) around printed circuit boards.**
- **Do not touch the components or conductors on a printed circuit board with your hands or with conductive devices.**

IMPORTANT DEFINITIONS

WARNING—indicates a potentially hazardous situation which, if not avoided, could result in death or serious injury.

CAUTION—indicates a potentially hazardous situation which, if not avoided, could result in damage to equipment.

NOTE—provides other helpful information that does not fall under the warning or caution categories.

Revisions—Text changes are indicated by a black line alongside the text.

Contents

CHAPTER 1. PRINCIPLES OF OPERATION 1
Introduction 1
General 1
Fuel Valve Specifications 1
Starting 1
Acceleration 2
Steady State Operation 2
Deceleration 2
Safety Feature 2

CHAPTER 2. INSTALLATION AND CALIBRATION 4
Installation 4
Calibration 4

CHAPTER 3. TROUBLESHOOTING 5

CHAPTER 4. STORAGE 6
Storage Material 6
Short-Term Storage (one year or less) 6
Long-Term Storage (more than one year) 6

CHAPTER 5. PARTS IDENTIFICATION 7

CHAPTER 6. SERVICE OPTIONS 11
Product Service Options 11
Returning Equipment for Repair 12
Replacement Parts 13
How to Contact Woodward 13
Engineering Services 14
Technical Assistance 15

Illustrations and Tables

Figure 1-1. 38 Liquid Fuel Valve and Limiter 3
Figure 5-1. Parts Identification (1) 9
Figure 5-2. Parts Identification (2) 10

Chapter 1.
Principles of Operation

Introduction

The 38 Liquid Fuel Valve and Limiter is used with a governor/actuator. The valve meters fuel to the turbine for starting, acceleration, deceleration, and steady-state operation at all normal loads. It limits fuel to the engine in event of bellows failure and prevents flameout during deceleration. It limits maximum fuel delivered to the turbine.

The valve/limiter is mechanically linked to the actuator. The actuator determines fuel flow for any given condition of steady-state operation. The limiter sets a maximum fuel limit as a function of compressor discharge pressure (CDP) , and overrides the input from the actuator during starting and acceleration. During large reductions in load or speed settings, a minimum-fuel stop limits fuel restrictions and prevents flameouts.

General

The fuel valve/limiter is mechanically connected to a governor/actuator. Fuel is metered to the turbine for starting, acceleration, steady-state operation, and deceleration. During acceleration the valve meters fuel as a function of GDP. During steady-state operation, fuel flow is controlled by the governor/actuator through the mechanical linkage.

Fuel Valve Specifications

Fuel Types	Aviation gasoline, JP-4, JP-5, or diesel fuel
Specific Gravity	0.70 to 0.85
Fuel Flow	1000 lb/h (454 kg/h) (maximum)
Fuel Pressures	
Inlet	1000 psig (6895 kPa) maximum
Outlet	1000 psig (6895 kPa) maximum
Bypass	15 psig (103 kPa)
CDP	120 psig (827 kPa) maximum

Starting

During starting, the fuel limiter is in the minimum acceleration fuel position, and the limiter actuator is against the internal minimum limiter stop position. The input lever is moved to maximum fuel position by the governor. The factory adjusted limiter lever determines the position of the metering plunger. Under these conditions, the valve is sufficiently opened to allow starting fuel to flow. Any excess fuel is returned to the pump inlet through the bypass valve.

Acceleration

After ignition, the turbine will accelerate toward the governor speed setting. As the turbine accelerates, the CDP increases and causes the limiter to move toward the set governor speed. When the turbine approaches this speed, the governor takes over and provides the proper fuel flow for steady-state operations.

Steady State Operation

Once running speed is reached, the governor will increase or decrease fuel flow as a function of speed.

Deceleration

The governing system will decrease fuel flow as load or speed settings are reduced. In order to sustain combustion and prevent flameout, the internal fuel stop limits the movement of the input shaft in the decrease-fuel direction.

Safety Feature

In event of bellows failure, the metering valve will return to minimum-fuel position.

NOTE
If fuel is allowed to completely drain from the valve, internal parts may be exposed to conditions leading to rust. To prevent this situation from occurring, the overboard drain line must be installed in a manner that will retain fuel in the valve chambers.

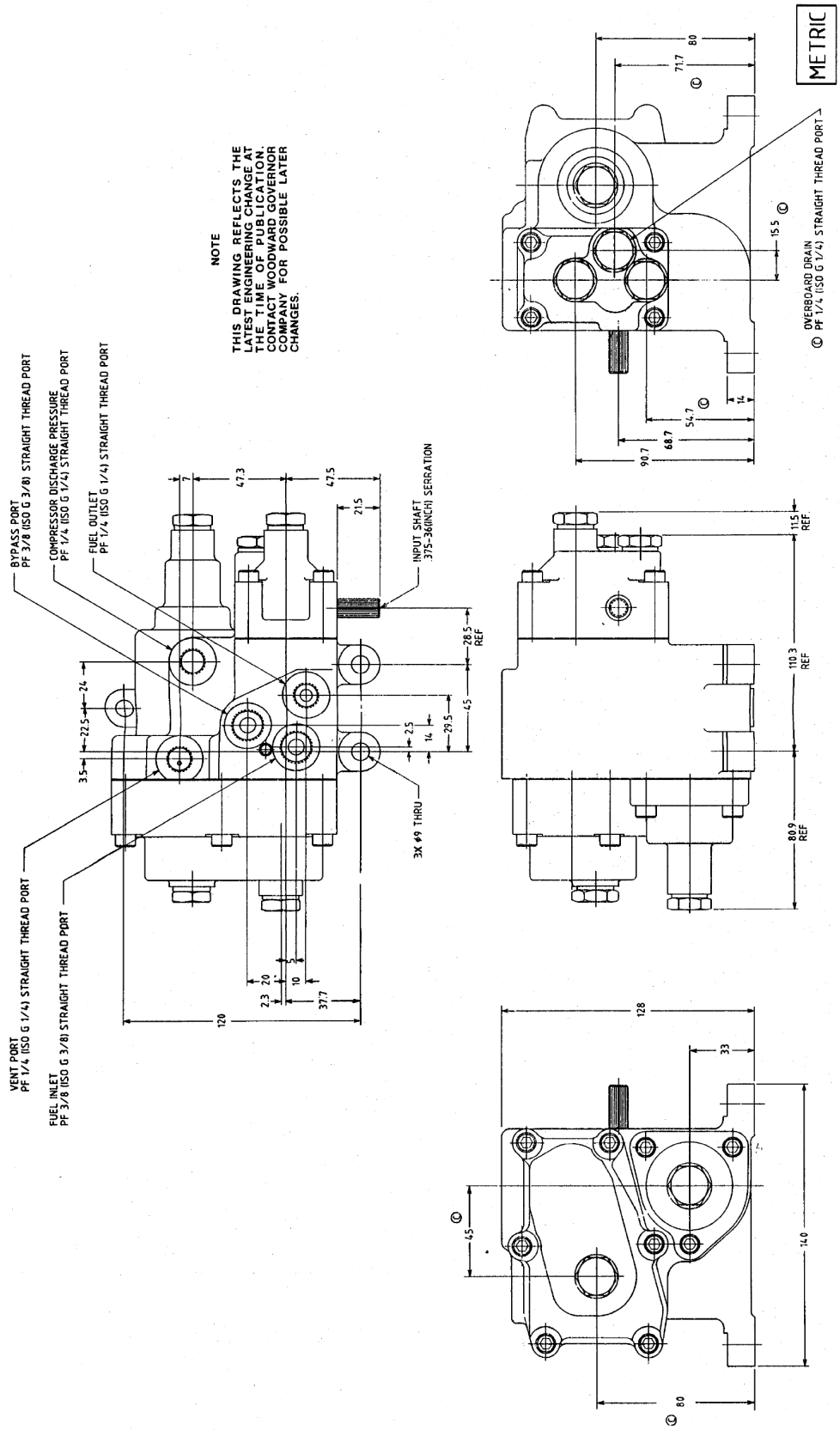

Figure 1-1. 38 Liquid Fuel Valve and Limiter

Chapter 2.
Installation and Calibration

Installation

Install the 38 Liquid Fuel Valve/Limiter square with the governor/actuator linkage to prevent binding.

Calibration

The 38 Liquid Fuel Valve/Limiter has been calibrated to a specific fuel-flow curve prior to shipment. Calibration of the valve/limiter requires use of adequate test facilities. Therefore, Woodward does not consider the valve/limiter to be user adjustable.

Attempts to adjust the device may void the warranty.

If the unit does not function according to stated specifications, contact Woodward or your authorized dealer or distributor.

NOTE
When returning a valve, please indicate the type and serial number of the prime mover; specify field tank-head pressure, and be sure to state the reason for the return. This information will aid in the prompt evaluation and calibration of the valve.

Chapter 3. Troubleshooting

Woodward does not recommend user adjustment of the 38 Liquid Fuel Valve/Limiter.

Some problems may be external to the valve/limiter.

Improper speed variations

- Refer to governor systems manuals to help isolate the cause.
- Inspect the linkage between the governor and the fuel valve. Be sure there is no binding or lost motion.
- Disconnect actuator linkage and verify that the valve input shaft can be rotated between stops without exceeding a torque of 2.0 lb-in (0.23 N·m).
- During cranking and prior to reaching ignition speed, the governor should rotate the valve input shaft to the maximum fuel stop. If this does not occur, inspect the governor system for proper operation.
- If the turbine starts but is slow to accelerate, the governor speed setting may be improperly adjusted.
- 1ff the governor speed setting is properly set and acceleration to normal speed does not occur, inspect for:
  - Insufficient inlet-fuel pressure
    - Check line gauge for' correct pressure
    - When required, adjust inlet-fuel-pressure regulator
  - CDP signal leak
    - Inspect hoses and connections for leaks
    - Correct when necessary

If the following conditions occur, contact Woodward or your authorized dealer or distributor:

- Full load on engine reduces speed
- Acceleration temperature is very low
- Engine does not accelerate
- Hot starts
- Overtemperature

Chapter 4.
Storage

Storage Material

Use the following materials to protect the valve/limiter during storage:

Use	Material
Storage Oil	Ready-mixed corrosion-resistant lubricating oil for turbojet aircraft
Barrier Material	Material must be: flexible, greaseproof, waterproof, non-corrosive, non-stretchable, and heat sealable.
Desiccant Material	Newly manufactured, dust-free material that is non-deliquescent. It must be in a puncture/tear-proof bag with unbreakable tie strings.
Identification Tags	Commercially available.

Short-Term Storage (one year or less)

Flush the unit with corrosion-resistant oil.

On two identification tags, record the date that the valve was prepared for storage and identify the oil used. Attach one tag to the unit and one to the exterior of the storage container.

Place protective closures in open ports. Wrap and seal the unit in barrier material.

Cushion the unit and place it in a suitable container.

Long-Term Storage (more than one year)

Perform all steps of short-term storage instructions. In addition, include a proper amount of desiccant with valve before wrapping and storing in barrier material.

NOTE
As long as the valve/limiter remains in storage, it does not require reflushing.

Chapter 5.
Parts Identification

Whenever ordering a part, always include the following information:

- 38 Liquid Fuel Valve/Limiter serial number and part number. This information may be found on the nameplate
- Manual number (this is manual 40116)
- Parts reference number and the part name, as shown in the parts list, or a description of the part

Figures 5-1 and 5-2 illustrate parts location and give part reference numbers. The part reference number may be used to identify the part name in the part reference list.

Ref. No.	Part Name	Quantity
40116-1	Fuel Valve body assembly	1
40116-2	Socket head cap screw (M6x40)	10
40116-3	CDP limiter cover	1
40116-4	Not used	
40116-5	Screw	3
40116-6	Cover assembly	1
40116-7	Edge seal plug	6
40116-8	Input shaft cover sub assembly	1
40116-9	Socket set screw (M6x12)	3
40116-10	Input lever	1
40116-11	O-ring	1
40116-12	Input shaft	1
40116-13	Oilite bushing	1
40116-14	O-ring	1
40116-15	Pin	1
40116-16	Rulon bearing	2
40116-17	CDP shaft assembly	1
40116-18	Hex nut (M8x6H)	1
40116-19	Spring lock washer	1
40116-20	Bellows assembly	1
40116-21	O-ring	1
40116-22	CDP spring	1
40116-23	CDP spring seat	1
40116-24	Shim washer	as required
40116-25	Shim holder	1
40116-26	O-ring	2
40116-27	Ball bearing	1
40116-28	O-ring	1
40116-29	Step seal	1
40116-30	Retainer seal	1
40116-31	Linear ball housing	1
40116-32	Linear ball bearing	1
40116-33	CDP limiter adjusting screw	1
40116-34	CDP limiter lever	1
40116-35	Washer	1
40116-36	Washer	1
40116-37	Nut	1
40116-38	Headed pin	1
40116-39	Socket head cap screw	3
40116-40	Bellows retaining plate	1
40116-41	Pin	1
40116-42	Metering sleeve retainer	1
40116-43	Bracket	1
40116-44	Socket head cap screw (M6x15)	2
40116-45	CDP limiter lever	1

Ref. No.	Part Name	Quantity
40116-46	Torsion spring	1
40116-47	Socket head screw (M5x8)	1
40116-48	Fuel limit disk	1
40116-49	Metering plunger	1
40116-50	Fuel metering sleeve	1
40116-51	Gasket	1
40116-52	O-ring	1
40116-53	O-ring	1
40116-54	O-ring	1
40116-55	Wave washer	1
40116-56	Metering valve return seat	1
40116-57	Metering valve return spring	1
40116-58	Snap ring	1
40116-59	O-ring	1
40116-60	O-ring	1
40116-61	Bypass valve sleeve	1
40116-62	O-ring	1
40116-63	Bypass valve plunger	1
40116-64	O-ring	1
40116-65	Specific gravity spring	1
40116-66	Steel ball	1
40116-67	Spring seat	1
40116-68	Socket set screw (M6x35)	1

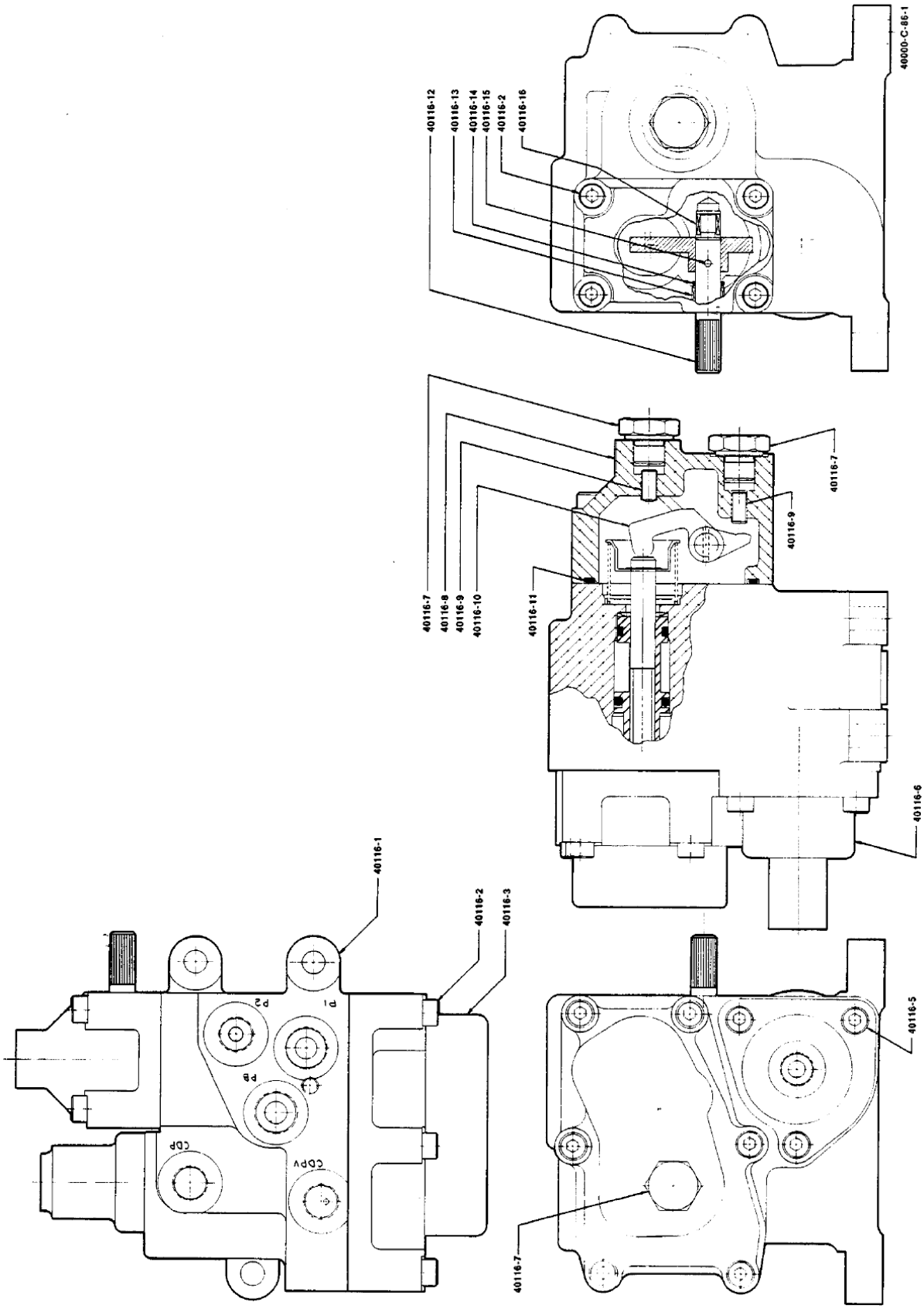

Figure 5-1. Parts Identification (1)

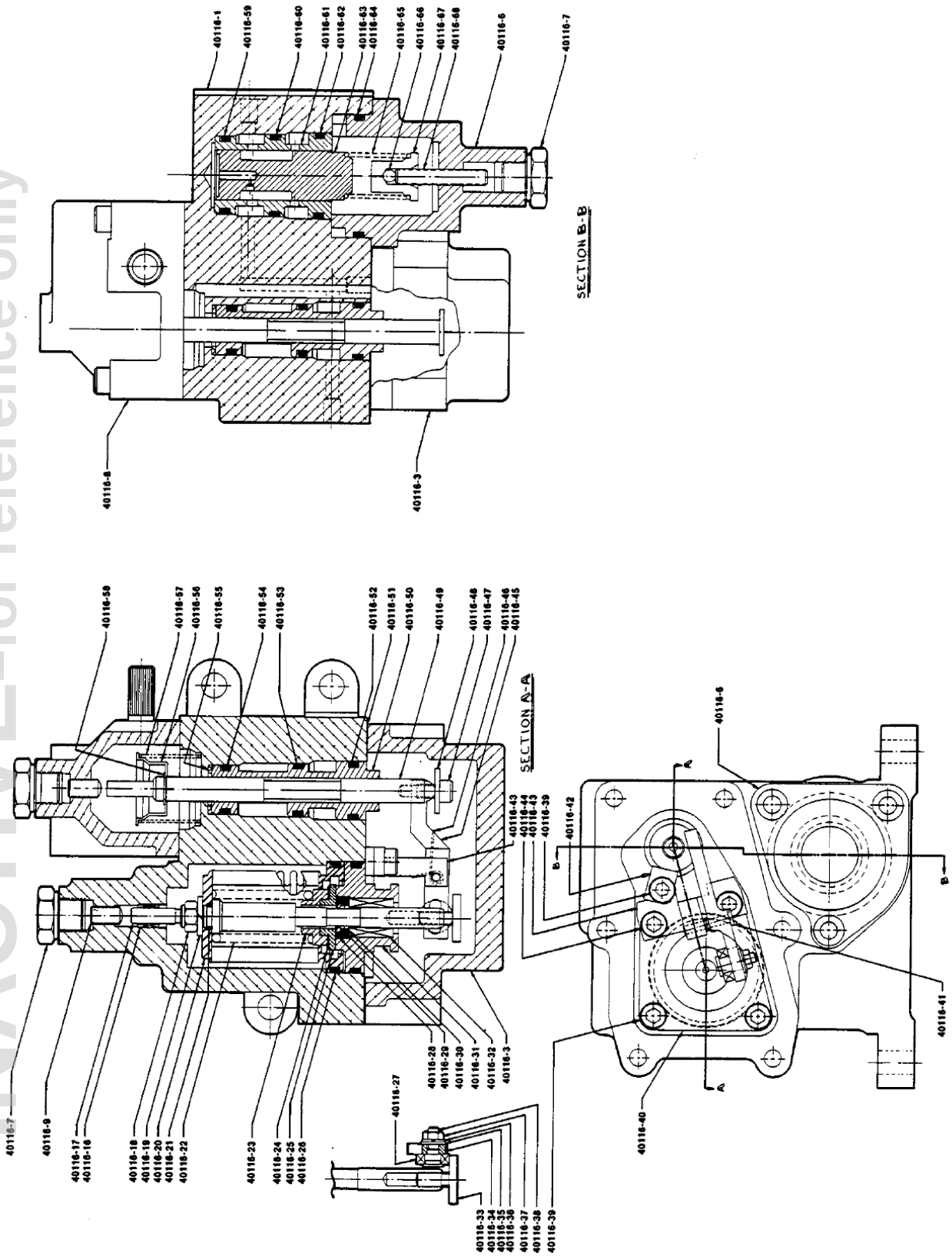

Figure 5-2. Parts Identification (2)

Chapter 6.
Service Options

Product Service Options

The following factory options are available for servicing Woodward equipment, based on the standard Woodward Product and Service Warranty (5-01-1205) that is in effect at the time the product is purchased from Woodward or the service is performed:

- Replacement/Exchange (24-hour service)
- Flat Rate Repair
- Flat Rate Remanufacture

If you are experiencing problems with installation or unsatisfactory performance of an installed system, the following options are available:

- Consult the troubleshooting guide in the manual.
- Contact Woodward technical assistance (see “How to Contact Woodward” later in this chapter) and discuss your problem. In most cases, your problem can be resolved over the phone. If not, you can select which course of action you wish to pursue based on the available services listed in this section.

Replacement/Exchange

Replacement/Exchange is a premium program designed for the user who is in need of immediate service. It allows you to request and receive a like-new replacement unit in minimum time (usually within 24 hours of the request), providing a suitable unit is available at the time of the request, thereby minimizing costly downtime. This is also a flat rate structured program and includes the full standard Woodward product warranty (Woodward Product and Service Warranty 5-01-1205).

This option allows you to call in the event of an unexpected outage, or in advance of a scheduled outage, to request a replacement control unit. If the unit is available at the time of the call, it can usually be shipped out within 24 hours. You replace your field control unit with the like-new replacement and return the field unit to the Woodward facility as explained below (see “Returning Equipment for Repair” later in this chapter).

Charges for the Replacement/Exchange service are based on a flat rate plus shipping expenses. You are invoiced the flat rate replacement/exchange charge plus a core charge at the time the replacement unit is shipped. If the core (field unit) is returned to Woodward within 60 days, Woodward will issue a credit for the core charge. [The core charge is the average difference between the flat rate replacement/exchange charge and the current list price of a new unit.]

Return Shipment Authorization Label. To ensure prompt receipt of the core, and avoid additional charges, the package must be properly marked. A return authorization label is included with every Replacement/Exchange unit that leaves Woodward. The core should be repackaged and the return authorization label affixed to the outside of the package. Without the authorization label, receipt of the returned core could be delayed and cause additional charges to be applied.

Flat Rate Repair

Flat Rate Repair is available for the majority of standard products in the field. This program offers you repair service for your products with the advantage of knowing in advance what the cost will be. All repair work carries the standard Woodward service warranty (Woodward Product and Service Warranty 5-01-1205) on replaced parts and labor.

Flat Rate Remanufacture

Flat Rate Remanufacture is very similar to the Flat Rate Repair option with the exception that the unit will be returned to you in “like-new” condition and carry with it the full standard Woodward product warranty (Woodward Product and Service Warranty 5-01-1205). This option is applicable to mechanical products only.

Returning Equipment for Repair

If a control (or any part of an electronic control) is to be returned to Woodward for repair, please contact Woodward in advance to obtain a Return Authorization Number. When shipping the item(s), attach a tag with the following information:

- name and location where the control is installed;
- name and phone number of contact person;
- complete Woodward part number(s) and serial number(s);
- description of the problem;
- instructions describing the desired type of repair.

CAUTION

To prevent damage to electronic components caused by improper handling, read and observe the precautions in Woodward manual 82715, *Guide for Handling and Protection of Electronic Controls, Printed Circuit Boards, and Modules*.

Packing a Control

Use the following materials when returning a complete control:

- protective caps on any connectors;
- antistatic protective bags on all electronic modules;
- packing materials that will not damage the surface of the unit;
- at least 100 mm (4 inches) of tightly packed, industry-approved packing material;
- a packing carton with double walls;
- a strong tape around the outside of the carton for increased strength.

Return Authorization Number

When returning equipment to Woodward, please telephone and ask for the Customer Service Department [1 (800) 523-2831 in North America or +1 (970) 482-5811]. They will help expedite the processing of your order through our distributors or local service facility. To expedite the repair process, contact Woodward in advance to obtain a Return Authorization Number, and arrange for issue of a purchase order for the item(s) to be repaired. No work can be started until a purchase order is received.

NOTE
We highly recommend that you make arrangement in advance for return shipments. Contact a Woodward customer service representative at 1 (800) 523-2831 in North America or +1 (970) 482-5811 for instructions and for a Return Authorization Number.

Replacement Parts

When ordering replacement parts for controls, include the following information:

- the part number(s) (XXXX-XXXX) that is on the enclosure nameplate;
- the unit serial number, which is also on the nameplate.

How to Contact Woodward

In North America use the following address when shipping or corresponding:

Woodward Governor Company
PO Box 1519
1000 East Drake Rd
Fort Collins CO 80522-1519, USA

Telephone—+1 (970) 482-5811 (24 hours a day)
Toll-free Phone (in North America)—1 (800) 523-2831
Fax—+1 (970) 498-3058

For assistance outside North America, call one of the following international Woodward facilities to obtain the address and phone number of the facility nearest your location where you will be able to get information and service.

Facility	Phone Number
Brazil	+55 (19) 3708 4800
India	+91 (129) 230 7111
Japan	+81 (476) 93-4661
The Netherlands	+31 (23) 5661111

You can also contact the Woodward Customer Service Department or consult our worldwide directory on Woodward's website (**www.woodward.com**) for the name of your nearest Woodward distributor or service facility.

Engineering Services

Woodward Industrial Controls Engineering Services offers the following after-sales support for Woodward products. For these services, you can contact us by telephone, by email, or through the Woodward website.

- Technical Support
- Product Training
- Field Service

Contact information:
Telephone—+1 (970) 482-5811
Toll-free Phone (in North America)—1 (800) 523-2831
Email—icinfo@woodward.com
Website—**www.woodward.com**

Technical Support is available through our many worldwide locations or our authorized distributors, depending upon the product. This service can assist you with technical questions or problem solving during normal business hours. Emergency assistance is also available during non-business hours by phoning our toll-free number and stating the urgency of your problem. For technical support, please contact us via telephone, email us, or use our website and reference ***Customer Services*** and then ***Technical Support***.

Product Training is available at many of our worldwide locations (standard classes). We also offer customized classes, which can be tailored to your needs and can be held at one of our locations or at your site. This training, conducted by experienced personnel, will assure that you will be able to maintain system reliability and availability. For information concerning training, please contact us via telephone, email us, or use our website and reference ***Customer Services*** and then ***Product Training***.

Field Service engineering on-site support is available, depending on the product and location, from one of our many worldwide locations or from one of our authorized distributors. The field engineers are experienced both on Woodward products as well as on much of the non-Woodward equipment with which our products interface. For field service engineering assistance, please contact us via telephone, email us, or use our website and reference ***Customer Services*** and then ***Technical Support***.

Technical Assistance

If you need to telephone for technical assistance, you will need to provide the following information. Please write it down here before phoning:

General

Your Name_____
Site Location_____
Phone Number_____
Fax Number_____

Prime Mover Information

Engine/Turbine Model Number_____
Manufacturer_____
Number of Cylinders (if applicable)_____
Type of Fuel (gas, gaseous, steam, etc)_____
Rating_____
Application_____

Control/Governor Information

Please list all Woodward governors, actuators, and electronic controls in your system:

Woodward Part Number and Revision Letter
_____
Control Description or Governor Type
_____
Serial Number _____

Woodward Part Number and Revision Letter
_____
Control Description or Governor Type
_____
Serial Number _____

Woodward Part Number and Revision Letter
_____
Control Description or Governor Type
_____
Serial Number _____

If you have an electronic or programmable control, please have the adjustment setting positions or the menu settings written down and with you at the time of the call.

We appreciate your comments about the content of our publications.

Send comments to: icinfo@woodward.com

Please include the manual number from the front cover of this publication.

WOODWARD

PO Box 1519, Fort Collins CO 80522-1519, USA
1000 East Drake Road, Fort Collins CO 80525, USA
Phone +1 (970) 482-5811 • Fax +1 (970) 498-3058

Email and Website—www.woodward.com

**Woodward has company-owned plants, subsidiaries, and branches,
as well as authorized distributors and other authorized service and sales facilities throughout the world.**

Complete address / phone / fax / email information for all locations is available on our website.

04/9/F